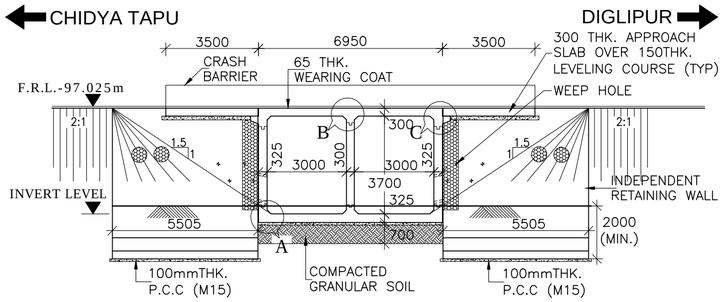

SECTION 1-1
(SCALE–1:150)

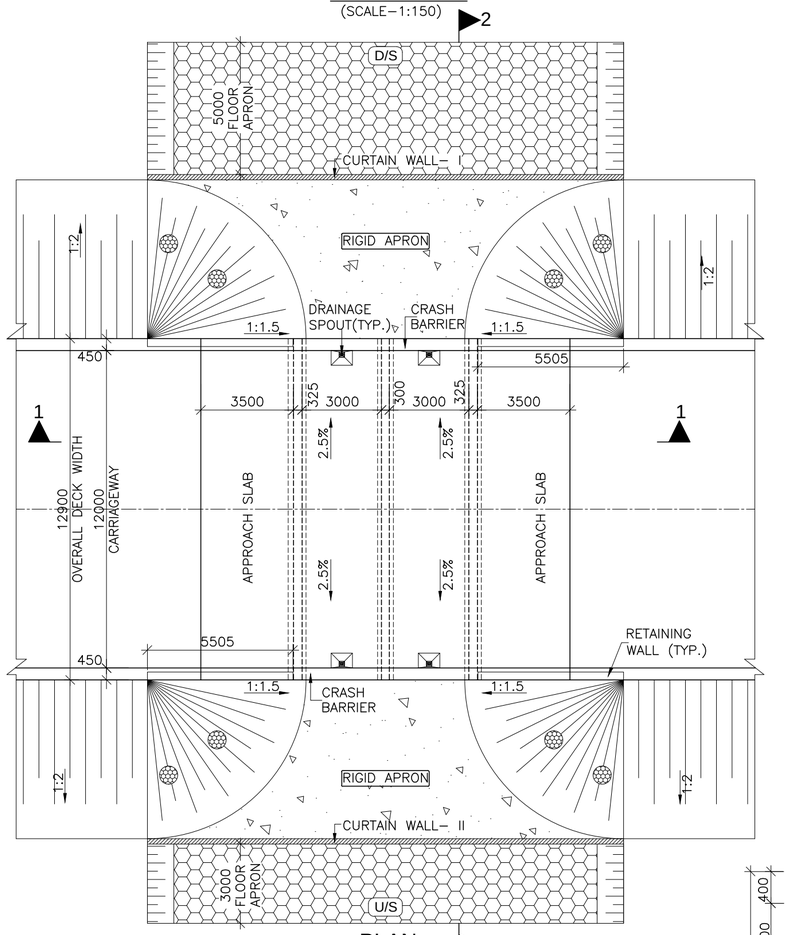

PLAN
(SCALE–1:150)

(TRAFFIC DIRECTION)

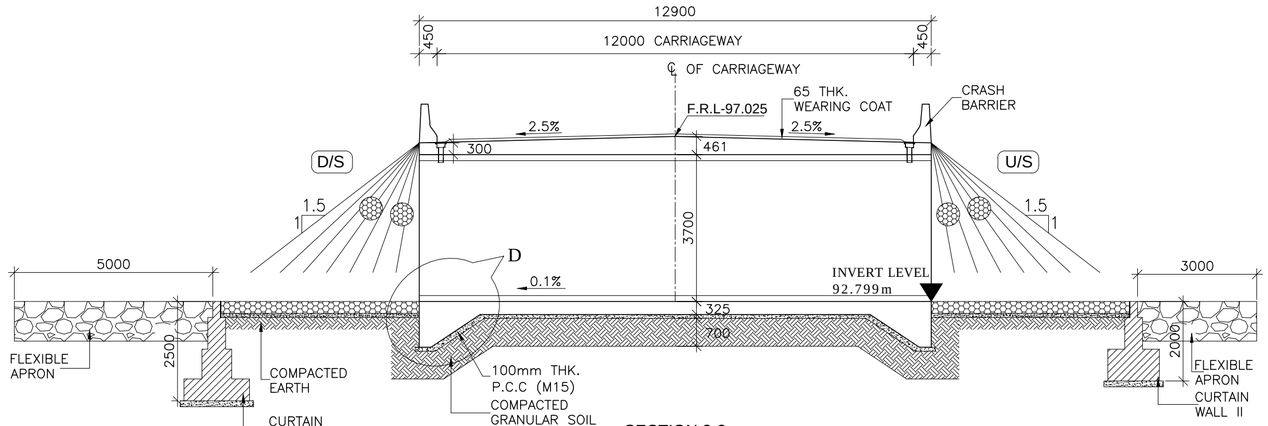

SECTION 2-2
(SCALE–1:100)

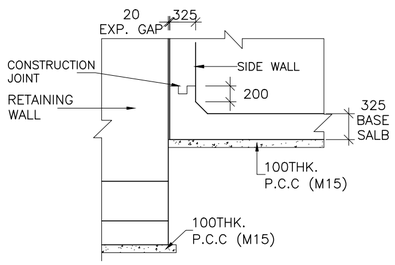

DETAIL - A
(SCALE–1:50)

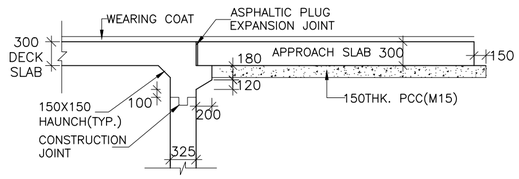

DETAIL - C
(SCALE–1:50)

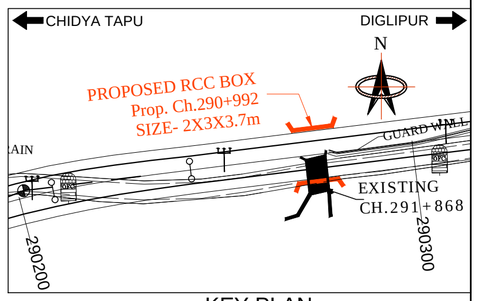

KEY PLAN

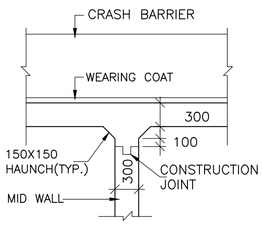

DETAIL - B
(SCALE–1:50)

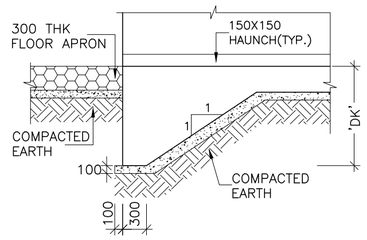

DETAIL - D
(SCALE–1:50)

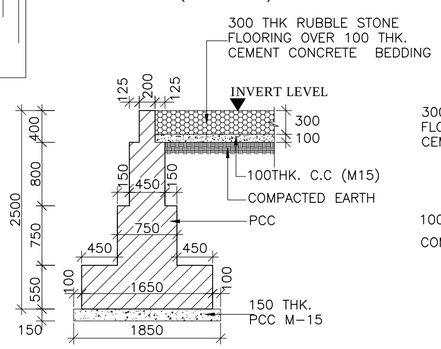

TYPICAL CROSS SECTION OF CURTAIN WALL TYPE-I (D/S)
(SCALE 1:50)

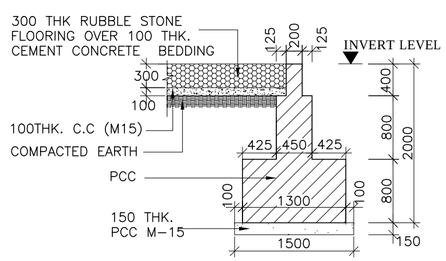

TYPICAL CROSS SECTION OF CURTAIN WALL TYPE-II (U/S)
(SCALE 1:50)

NOTES:-

1. ALL DIMENSIONS ARE IN MILLIMETERS, LEVELS ARE IN METERS UNLESS OTHERWISE MENTIONED. ONLY WRITTEN DIMENSIONS SHALL BE FOLLOWED.
2. CHAINAGE & LEVEL SHALL BE VERIFIED WITH THE RELEVANT PLAN & PROFILE DRAWINGS, VARIATION (IF ANY) SHALL BE REPORTED TO ENGINEER FOR MODIFICATION.
3. PROPERTIES OF SELECTED BACK FILL BEHIND RETAINING WALL SHALL BE AS FOLLOWS;– C=0, Φ > 30°,ϑ =2.0 t/m3 .
4. EXPANSION GAP (20mm) WILL BE FILLED UP BY ASPHALTIC PLUG EXPANSION JOINT.
5. GRADE OF CONCRETE IN VARIOUS ELEMENTS SHALL BE AS FOLLOWS:–

PCC CURTAIN WALL	: M15
APPROACH SLAB	: M30
RCC BOX	: M30
RETAINING WALL	: M30
RCC RAILING	: M30
CRASH BARRIER	: M40

6. NET SAFE BEARING CAPACITY AT FOUNDING LEVEL FOR DESIGN IS AS FOLLOWS:–

BOX	: 10 t/m2
RETAINING WALL	: 15 t/m2

7. WEEP HOLES SHALL BE PROVIDED @ 1000 MM C/C STAGGERED. BOTH HORIZONTALLY AND VERTICALLY IN RETAINING WALL FROM GROUND LEVEL TO HIGH FLOOD LEVEL.
8. BACKFILLING BEHIND BOX SHALL BE CARRIED OUT SIMULTANEOUSLY.
9. GRADE OF STEEL SHALL BE Fe–500D CONFORMING TO IS:1786.2008
10. 65MM THICK WEARING COAT SHALL CONSISTS OF LAYER OF OF MASTIC ASPHALT OF 25mm THK. OVER 40MM BITUMINOUS COURSE.
11. 'DK' IS DEPTH OF KEY AT BASE SLAB.

FOR BASE SLAB THICKNESS	VALUE OF 'DK'
UPTO 900mm	1200mm.
GREATER THAN 900mm	d+300mm

d = BASE SLAB THICKNESS

12. 600 THK. FILTER MEDIA SHALL BE PROVIDED BEHIND RETAINING WALL.
13. FOR DETAILS OF RETAINING WALL & FLOOR PROTECTION WORKS REFER SEPARATE DRAWINGS.
14. THIS STRUCTURE LIES IN SEISMIC ZONE V.
15. FRL. IS TAKEN AT MEDIAN EDGE.

SCALE :-	PROJECT :-	DWG TITLE :-	DRAWING No :- CPC/P-70/NH-223/GAD/290+992/01	
AS SHOWN	REHABILITATION AND UP-GRADATION OF SECTION FROM KM 242.0 TO 298.0 (AFTER AUSTIN CREEK TO KARALA) OF NH-223 TO 2-LANE WITH HARD SHOULDER IN THE UNION TERRITORY OF ANDAMAN & NICOBAR ISLANDS	GENERAL ARRANGEMENT DRAWING RCC BOX (SIZE 2X3.0X3.7m) AT CH.290+992	NOVEMBER 2016	Revision: R1
			PREPARED BY: SUNITA	CHECKED BY: MOHD. SALIK / APPROVED BY: NEERAJ